SX66 / MSX66

Stainless Steel and Mild Steel Enclosures

IP66/7

Application
Hazardous and Industrial areas

Protection Degree
IP66 or 67

Certification
ATEX & IECEx (Zone 0, 1 & 2; Zone 20, 21 & 22)
CSA Ex e (Class 1 Zone 1 & Zone 2)
FM AEx e(Class 1 Zone 1 & Zone 2)
TR CU Ex e (Zone 1 & Zone 2)
NEMA 4X (CSA, UL & FM)
Class 1 Division 2

Material
Stainless steel 316 (1.4404) or Mild steel

Temperature Rating
Hazardous Area: -50°C to +175°C
Non Hazardous: -60°C to +200°C

Power Rating
14.287W

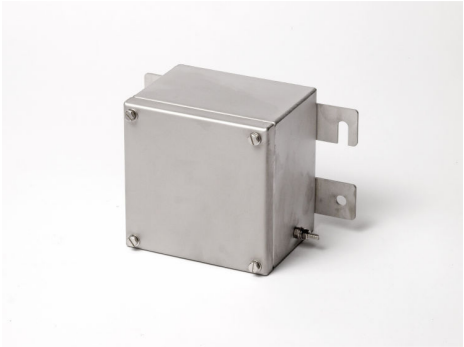

Terminal Populations (Maximum Number of Rails = 1)

Calculations do not include the use of end stops, end plates and separators. Check that the enclosure can accommodate the cable bending radius and that the earth stud and entry location will permit the required number of terminals to be fitted

Weidmuller	
SAK 2.5	15
SAK 4	15
SAK 6	11
SAK 10	9
SAK 16	7
SAK 35	6
SAK 70	0
WDU 2.5	17
WDU 4	15
WDU 6	11
WDU 10	9
WDU 16	7

Phoenix	
UK 2.5 N	17
UK 3 N	17
UK 5 N	14
UK 10 N	9
UK 16 N	7
UK 35 N	6

Wago	
280-992	18
280-999	18
281-691	15
281-992	15
281-993	15
282-691	11
284-691	10
283-691	7
285-691	0
280-998	18
281-998	15
264-120	16
264-220	10
264-132(2)	3
264-134(4)	2
262-132(2)	3
264-134(4)	2

Drilling Envelope Dimensions (mm)

	Side A - C	Side B - D
Width	152	152
Height	102	102

Gland Entry Matrix *

Size	Side A - C	Side B - D
M16	4	4
M20	2	2
M25	2	2
M32	0	0
M40	0	0

* Using standard gland clearances

Specifications

Part Number	Material	Width (mm)	Length (mm)	Depth (mm)	Weight (g)
SX66	Stainless Steel	152	152	102	2200
MSX66	Mild Steel	152	152	102	2200

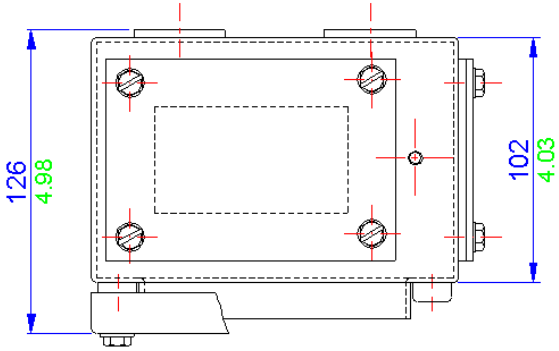

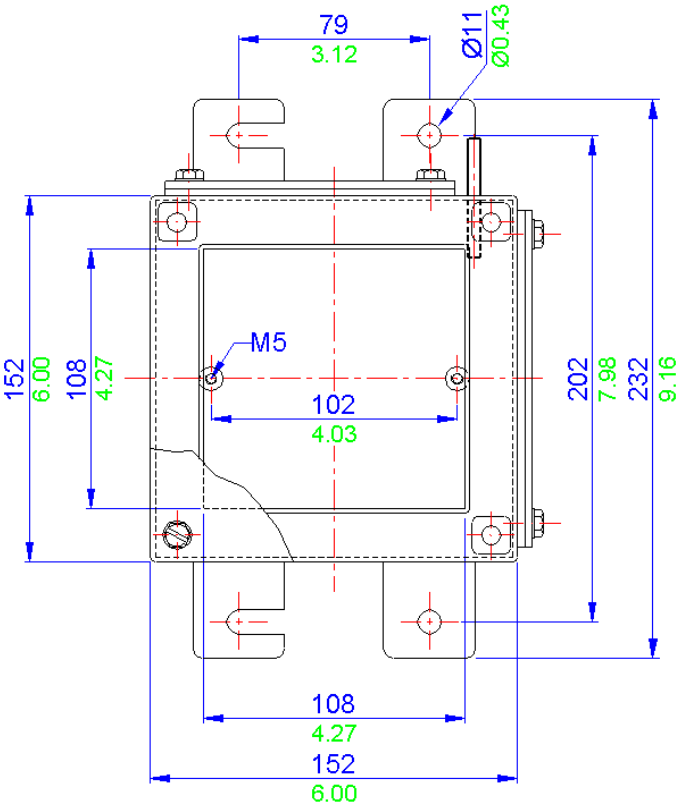

All **blue** dimensions in mm, all **green** dimensions in decimal inches (drawing not to scale)